Recessed Downlight

Product Specification

Item No.	LGSP-007
Input voltage	AC220-240V ~50/60HZ
LED type	CREE LED
Driver Brand	Lifud
Power	7W
Lumen flux	560lm
Color	2700K, 3000K, 4000K, 5000K
Beam angle	60°
Material	Die-cast aluminium with glass frosted diffuser
Finish	White + Black reflector
IP Rating	IP65
CRI	≥80Ra

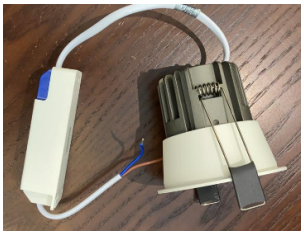

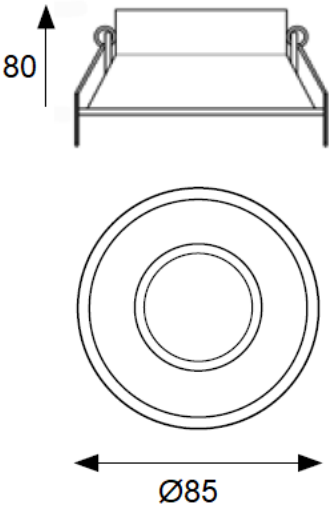

Lightec GmbH
Schlemmerwiesen 5 · D-96123 Litzendorf · +49 (0)951 80 79 1-0 · www.lightec.com · info@lightec.comTech